YOUR
SMART
ENERGY

SMILE-SP SERIES

(North America Only)

DC Coupled | Split Phase Hybrid ESS | HV Battery

7.6 kW 8.2 kWh / 9.6 kW 8.2 kWh

Expandable to **49.2** kWh with
8.2 kWh Battery Module

+

Outdoor

24 / 7 Monitoring

Whole Home Backup

AFCI & Rapid Shutdown

4 MPPTs

High Efficiency Battery

WIFI Module Integrated

SMILE-SP SERIES

Model	SMILE-SP7.6 / 9.6	
System Specification		
Nominal AC Output Power	7.6 kW	9.6 kW
Nominal AC Input Power	9.12 kW	9.6 kW
Capacity Range	8.2 kWh (95% DoD)	8.2 kWh (95% DoD)
Battery Chemistry	Li-ion (LFP)	Li-ion (LFP)
Max. PV Input Power	11.4 kW	15 kW
Max. PV Input Current	4 x 12.5 A	4 x 12.5 A
Max. PV Input Voltage	600 V	600 V
MPPT Number	4	4
MPPT Voltage Range	80 ~ 550 V	80 ~ 550 V
Max. PV Short-circuit Current	4 x 15.2 A	4 x 15.2 A
Max. Charging / Discharging Current	50 A	50 A
Max. AC Output Current	31.7 A	40 A
Max. AC Input Current	38 A	40 A
Rated Voltage	211 to 264 V @ 240 V	211 to 264 V @ 240 V
Backup	UPS	UPS
Humidity	0 ~ 95%	0 ~ 95%
Grid Regulation	UL1741 SA/B	UL1741 SA/B
Rated Frequency	60 Hz	60 Hz
Communication	WIFI	WIFI
Warranty	10 Year Product Warranty	10 Year Product Warranty
Expansion Battery Module Specification		
Module Model	SMILE-BAT-8.2PHA	
Total Energy	8.2 kWh	
Usable Energy	7.8 kWh	
Depth of Discharge (DoD)	95%	
Nominal Voltage	256 V	
Max. Charging / Discharging Current	38.4 A	
Operating Temperature Range	14°F ~ 122°F*	
Battery Modules Connection	1 ~ 6 in parallel (8.2 - 49.2 kWh)	
Compliance Information		
Safety	Cell	UL1973, UL9540A
	Battery Pack	UL1973, UL9540A
	Inverter	IEEE1547
	System	UL9540, UL1741 SA/B
Transport	UN38.3	
Emissions	FCC part 15 class B	
Ingress Rating	Inverter: NEMA 4X, Battery: IP65	

*Max. charge / discharge current derating may occur with changes in temperature and SoC.

SMILE-SP SERIES

Mechanical Specifications

Inverter (7.6 / 9.6 kW Hybrid Inverter)	Battery Modules (8.2 kWh Battery Module)
16.3 in × 31.1 in × 6.9 in W×H×D (415 mm × 791 mm × 175 mm)	22.8 in × 31.3 in × 9.0 in W×H×D (580 mm × 800 mm × 230 mm)
32 kg (70.5 lbs)	81 kg (178.7 lbs)

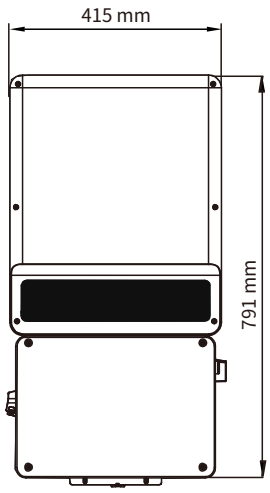

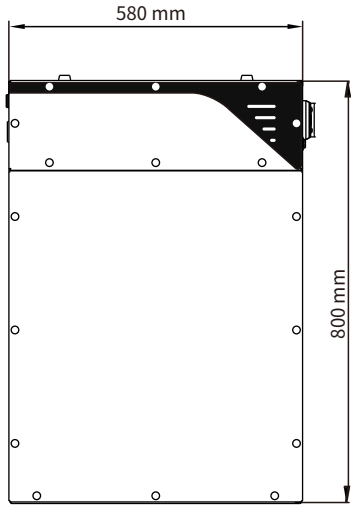

Transformer	Grid Meter
13.6 in × 10.9 in × 6.8 in W×H×D (345 mm × 277 mm × 174 mm)	2.13 in × 3.65 in × 2.05 in W×H×D (54.1 mm × 92.6 mm × 52 mm)
22 kg (48.5 lbs)	0.2 kg (0.441 lbs)

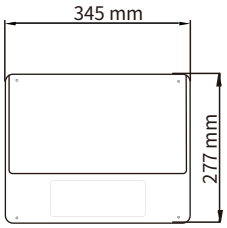

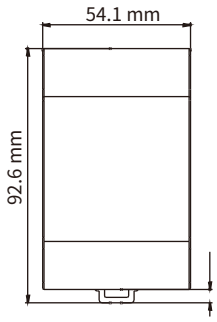

SMILE-SP Series 7.6 kW System contains the following components: 7.6 kW hybrid inverter + **8.2 kWh** battery module + Transformer + Grid Meter

SMILE-SP Series 9.6 kW System contains the following components: 9.6 kW hybrid inverter + **8.2 kWh** battery module + Transformer + Grid Meter

Alpha ESS USA, Inc.
+1 408 368 7828
usa@alpha-ess.com
Unit 5, 2180 S Ivanhoe St, Denver, CO 80222

Alpha ESS Co., Ltd.
+86 513 8060 6891
info@alpha-ess.com
www.alphaess.com
Jiuhua Road 888, Nantong High-Tech Industrial Development Zone, Nantong City, 226300

Alpha ESS Suzhou Co., Ltd.
+86 512 6828 7609
info@alpha-ess.com
www.alphaess.com
Building 10-A, Canal Town Industrial Park, 99 Taihu E Rd, Wuzhong District, Suzhou 215000

Alpha ESS Australia Pty. Ltd.
+61 402 500 520 (Sales)
+61 1300 968 933 (Technical Support)
info@alpha-ess.com
www.alphaess.com

Alpha ESS Europe GmbH
+49 610 3459 1601
europe@alpha-ess.de
www.alphaess.de
Paul-Ehrlich-Straße 1a, D-63225 Langen, Hessen

Alpha ESS Italy S.r.l.
+39 339 462 4288
info@alpha-ess.it
www.alphaess.com
Via Don Minzoni, 17, Calenzano Firenze 50041

Alpha ESS Korea Co., Ltd.
info@alpha-ess.com
2F, 19-4, Nohyeong 11-gil, Jeju-si, Jeju-do, Republic of Korea

Alpha ESS International Pte. Ltd.
+65 6513 1125 / +65 6513 1126
Singapore@alpha-ess.com
2 Corporation Road #01-06A Corporation Place Singapore 618494

Alpha ESS UK Ltd.
+44 145 354 5222
info@alpha-ess.com
Drake House, Long Street, Dursley, gl11 4hh

V002. 07082023 | Text and images correspond to the current state of technology at the time of printing.Subject to modifications. All information is without guarantee in spite of careful editing - liability excluded.

Notes

V00.18022022 | Text and images correspond to the current state of technology at the time of printing.Subject to modifications. All information is without guarantee in spite of careful editing - liability excluded.